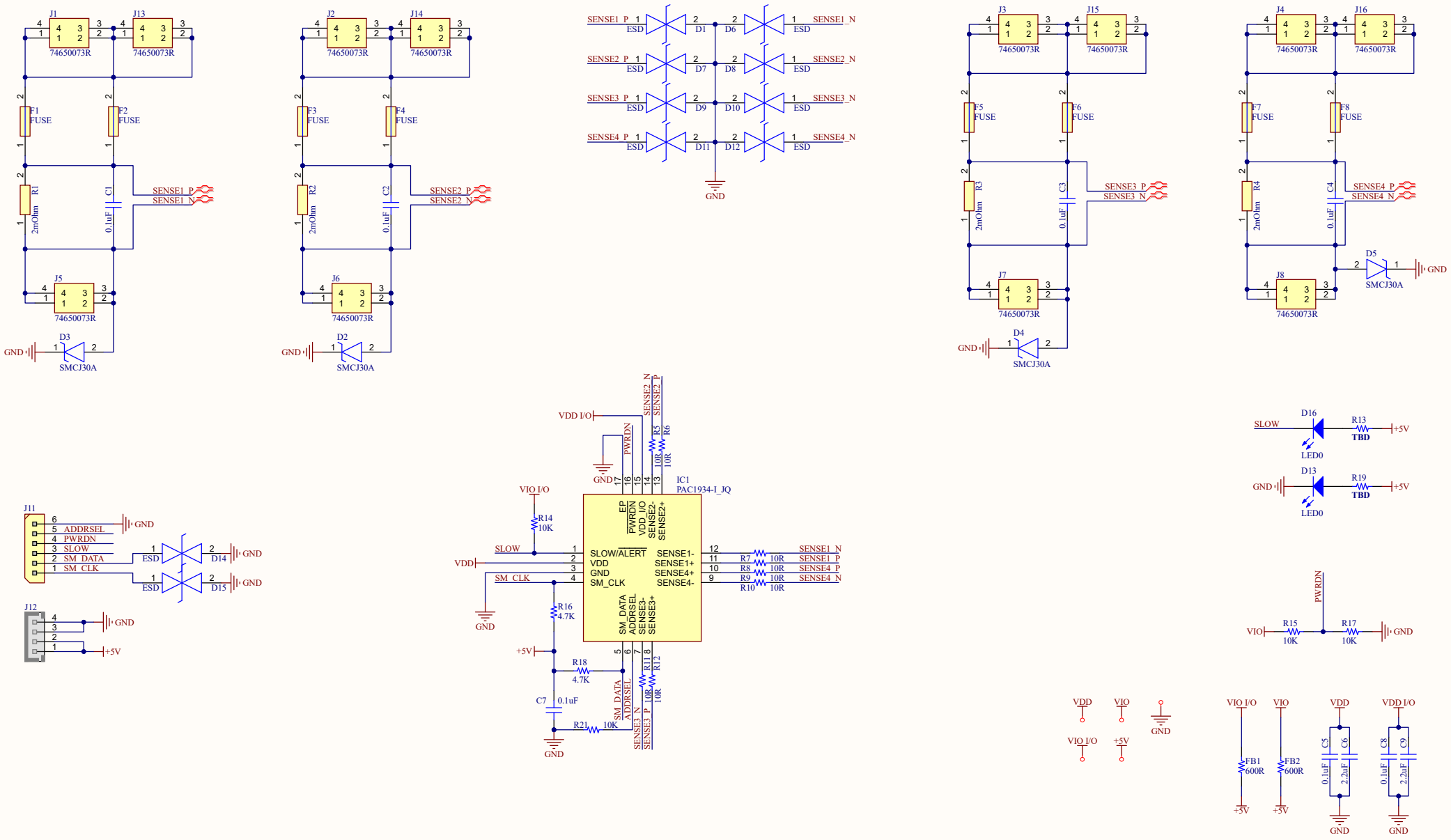

Title	Smart Quad e-Fuse & PDU	
Size A3	Number EFDC-2X4-120	Revision REV_3.1
Date: 3/19/2026		Sheet of
File: E:\Design Files\..\Main.SchDoc		Drawn By: Ghulam Rabbani